EVALUATION REPORT

FLORIDA BUILDING CODE 9TH EDITION (2026)

Issued July 30, 2026

Manufacturer: METAL ROOF SOURCE
1000 Charles Street
Longwood, FL
(321) 377-0077

Manufacturing: Longwood, FL

Quality Assurance: PRI Construction Materials Technologies (QUA9110)

SCOPE

Category: Roofing
Subcategory: Metal Roofing
Code Edition: Florida Building Code, 9th Edition (2026)
Code Sections: 1504.3
Properties: Wind Resistance

REFERENCES

Entity	Report No.	Standard	Year
PRI Construction Materials Technologies (TST5878)	2437T0003	UL 1897	2015
		UL 580	2006
PRI Construction Materials Technologies (TST5878)	2437T0004	UL 1897	2015
		UL 580	2006
PRI Construction Materials Technologies (TST5878)	2437T0005	UL 1897	2015
		UL 580	2006
PRI Construction Materials Technologies (TST5878)	2437T0008	UL 1897	2015
		UL 580	2006
PRI Construction Materials Technologies (TST5878)	2437T0009	UL 1897	2015
		UL 580	2006
PRI Construction Materials Technologies (TST5878)	2437T00010	UL 1897	2015
		UL 580	2006
PRI Construction Materials Technologies (TST5878)	2437T00011	UL 1897	2015
		UL 580	2006
PRI Construction Materials Technologies (TST5878)	2437T00012	UL 1897	2015
		UL 580	2006
PRI Construction Materials Technologies (TST5878)	2437T00013	UL 1897	2015
		UL 580	2006
PRI Construction Materials Technologies (TST5878)	2437T00015	UL 1897	2015
		UL 580	2006
PRI Construction Materials Technologies (TST5878)	2437T00016	UL 1897	2015
		UL 580	2006

This evaluation report is provided for State of Florida product approval under Rule 61G20-3. The manufacturer shall notify CREEK Technical Services, LLC of any product changes or quality assurance changes throughout the duration for which this report is valid. This evaluation report does not express nor imply warranty, installation, recommended use, or other product attributes that are not specifically addressed herein.

PRODUCT DESCRIPTION

Panel: **PBR**
Description: Preformed panel; 1.25-inch rib; Maximum 36-inch coverage
Material: Min. 26 ga. ASTM A792 AZ55, Grade 80 steel;
Shall conform with FBC Section 1507.4.3

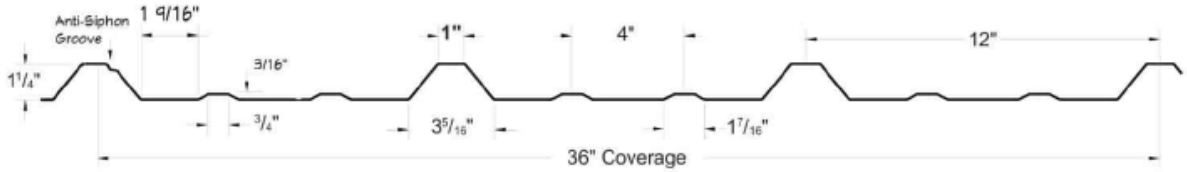

PBR Dimensions

Panel: **Rib**
Description: Preformed panel; 0.75-inch rib; Maximum 36-inch coverage
Material: Min. 26 ga. ASTM A792 AZ55, Grade 80 steel;
Shall conform with FBC Section 1507.4.3

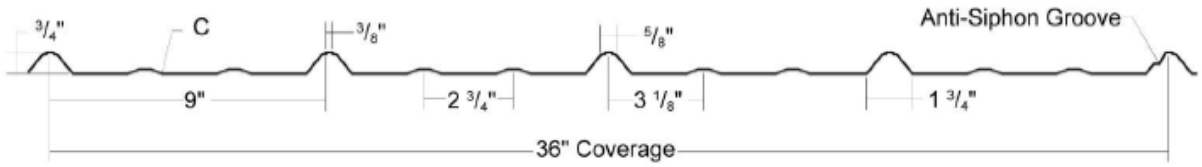

Rib Dimensions

Panel: **1.5" Snap Lock Standing Seam**
Description: Preformed panel; 1.5-inch snap lock seam; Maximum 16-inch coverage
Material: Min. 24 ga. ASTM A792 AZ55, Grade 50 steel;
Shall conform with FBC Section 1507.4.3

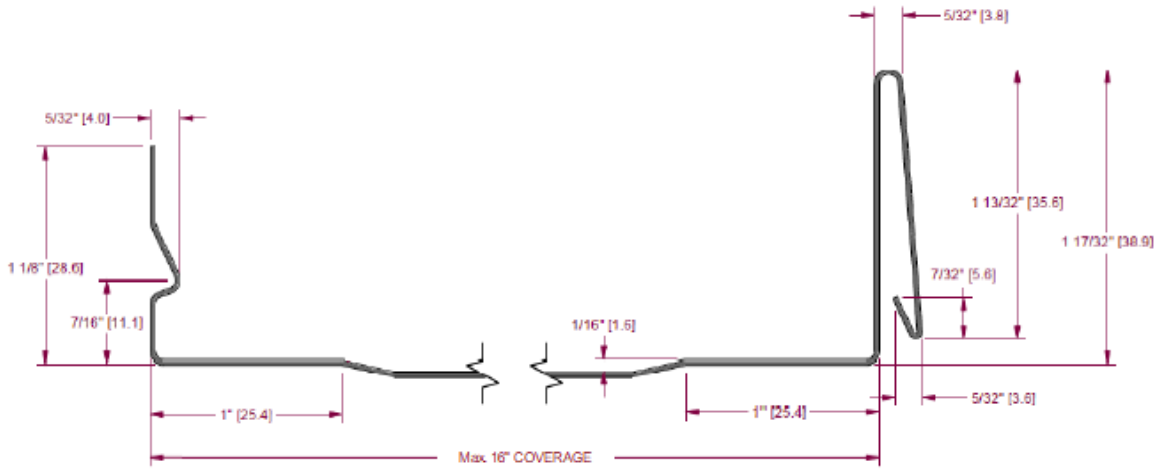

1.5" Snap Lock Standing Seam Dimensions

This evaluation report is provided for State of Florida product approval under Rule 61G20-3. The manufacturer shall notify CREEK Technical Services, LLC of any product changes or quality assurance changes throughout the duration for which this report is valid. This evaluation report does not express nor imply warranty, installation, recommended use, or other product attributes that are not specifically addressed herein.

Panel: **1.75" Snap Lock Standing Seam**

Description: Preformed panel; 1.5-inch snap lock seam; Maximum 18-inch coverage steel; Maximum 16-inch coverage Aluminum

Material: Min. 24 ga. ASTM A792 AZ55, Grade 50 steel or
Min. 0.032" ASTM B209 3105 H24 Aluminum;
Shall conform with FBC Section 1507.4.3

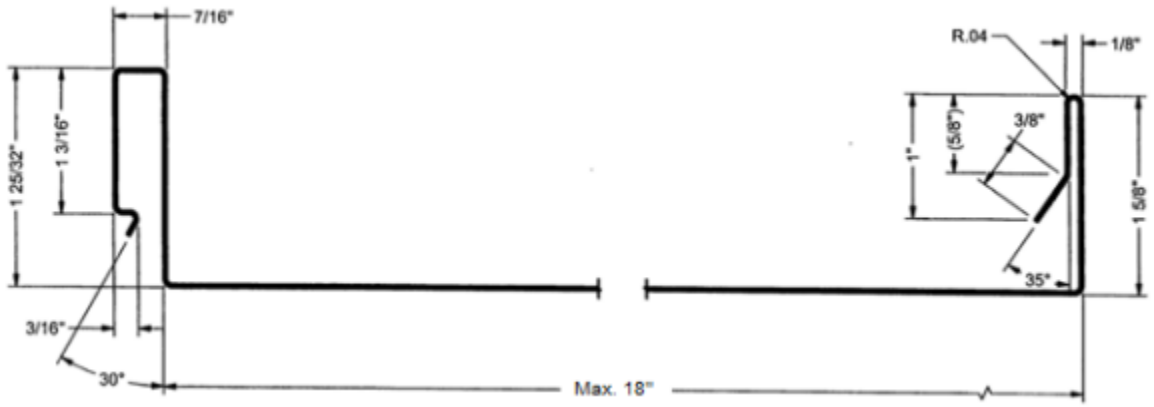

1.75" Snap Lock Standing Seam Dimensions

Panel: **1.5" Mechanical Lock**

Description: Preformed panel; 1.5-inch standing seam; Maximum 16-inch coverage

Material: Min. 24 ga. ASTM A792 AZ55, Grade 50 steel;
Shall conform with FBC Section 1507.4.3

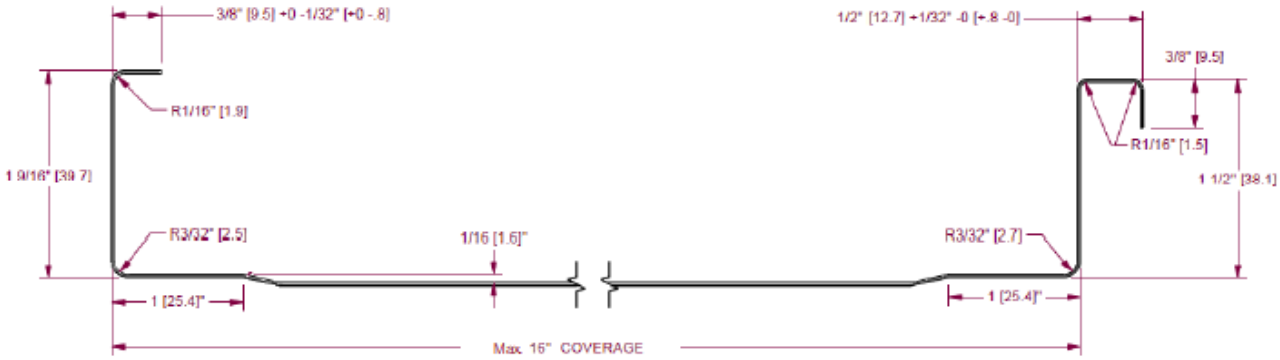

1.5" Mechanical Lock Dimensions

This evaluation report is provided for State of Florida product approval under Rule 61G20-3. The manufacturer shall notify CREEK Technical Services, LLC of any product changes or quality assurance changes throughout the duration for which this report is valid. This evaluation report does not express nor imply warranty, installation, recommended use, or other product attributes that are not specifically addressed herein.

Panel: **2" Mechanical Lock**

Description: Preformed panel; 2-inch standing seam; Maximum 16-inch coverage

Material: Min. 24 ga. ASTM A792 AZ55, Grade 50 steel;
Shall conform with FBC Section 1507.4.3

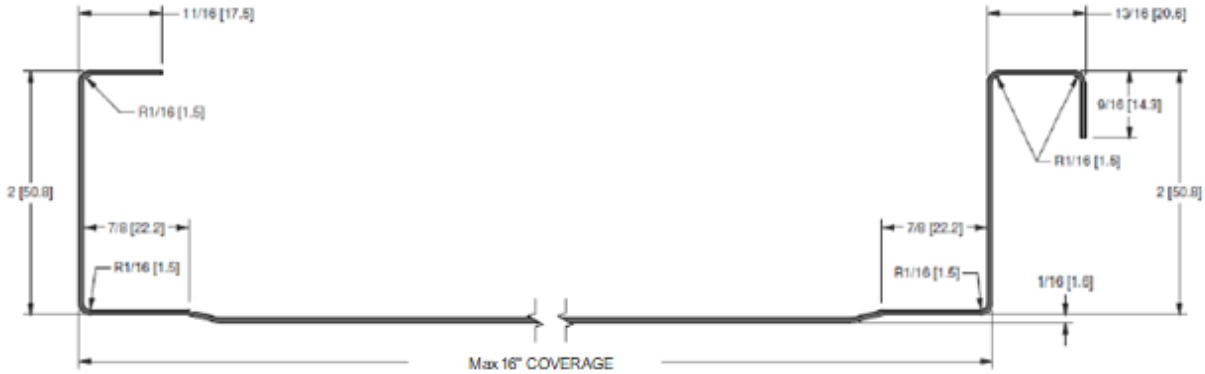

2" Mechanical Lock Dimensions

Panel: **1" Nail Strip**

Description: Preformed panel; 1" nail strip standing seam; Maximum 16-inch coverage

Material: Min. 24 ga. ASTM A792 AZ50, Grade 50 steel;
Min. 26 ga. ASTM A792 AZ50, Grade 80 steel or
Min. 0.032" ASTM B209 3105 H24 Aluminum (F_y = min. 24ksi)
Shall conform with FBC Section 1507.4.3

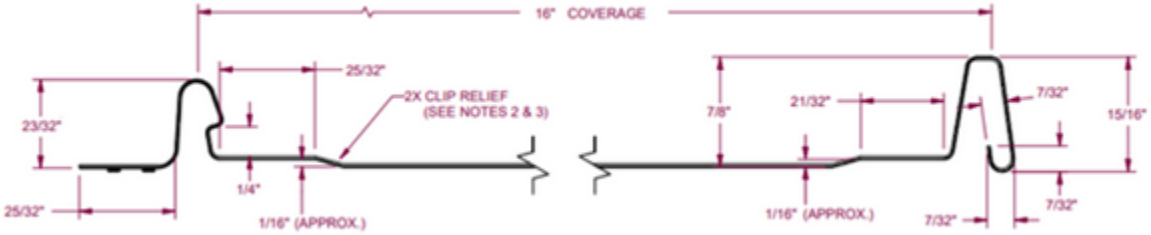

1" Nail Strip Dimensions

This evaluation report is provided for State of Florida product approval under Rule 61G20-3. The manufacturer shall notify CREEK Technical Services, LLC of any product changes or quality assurance changes throughout the duration for which this report is valid. This evaluation report does not express nor imply warranty, installation, recommended use, or other product attributes that are not specifically addressed herein.

LIMITATIONS

1. This report is not for use in the HVHZ.
2. Fire classification is not within the scope of this evaluation.
3. The roof deck and the roof deck attachment shall be designed by others to meet the minimum design loads established for components and cladding and in accordance with FBC requirements.
4. Roof slope shall be in accordance with FBC Section 1507.4.2.
5. Roof systems are evaluated for wind resistance as non-structural roof cladding only. Where structural applications are desired, Chapter 16 structural load evaluations shall be provided by a licensed design professional to the satisfaction of the Authority Having Jurisdiction.
6. Reroofing shall be in accordance with FBC Section 1511. Recovery versus replacement shall be evaluated in accordance with FBC Section 1511.3.
7. Installation of the evaluated products shall comply with this report, the FBC and the manufacturer's published application instructions. Where discrepancies exist between these sources, the more restrictive and FBC compliant installation detail shall prevail.
8. Materials shall conform to FBC Sections 1506 and 1711.
9. FBC Section 1504.3.1.1 is not within the scope of this evaluation. Compliance with FBC Section 1504.3.1.1 shall be established through other *approved* products.
10. All products listed in this report shall be manufactured under a quality assurance program in compliance with Rule 61G20-3.

COMPLIANCE STATEMENT

This report has been prepared in accordance with F.A.C. Rule 61G20-3.

This item has been digitally signed and sealed by Zachary R. Priest, PE, on 7/30/2026.

Printed copies of this document are not considered signed and sealed and the signature must be verified on any electronic copies.

Digitally signed by Zachary R. Priest

2026.07.30 11:20:10 -04'00'

Zachary R. Priest, P.E.
Florida Registration No. 74021
Organization No. ANE9641

CERTIFICATION OF INDEPENDENCE

CREEK Technical Services, LLC does not have, nor will it acquire, a financial interest in any company manufacturing or distributing products under this evaluation.

CREEK Technical Services, LLC is not owned, operated, or controlled by any company manufacturing or distributing products under this evaluation.

Zachary R. Priest, P.E. does not have, nor will acquire, a financial interest in any company manufacturing or distributing products under this evaluation.

Zachary R. Priest, P.E. does not have, nor will acquire, a financial interest in any other entity involved in the approval process of the product.

APPENDICES

1) APPENDIX A – Installation (2 pages)
2) APPENDIX B – Approved Roof Systems (3 pages)
3) APPENDIX C – Design Wind Loads (4 pages)

This evaluation report is provided for State of Florida product approval under Rule 61G20-3. The manufacturer shall notify CREEK Technical Services, LLC of any product changes or quality assurance changes throughout the duration for which this report is valid. This evaluation report does not express nor imply warranty, installation, recommended use, or other product attributes that are not specifically addressed herein.

INSTALLATION

Note - Refer to the ***APPROVED ROOF SYSTEMS*** *section of this report for specific installation details of a selected system.*

Unless otherwise specified in this report the following installation details shall be met for the named products:

Component	Product	Installation Detail
Fasteners	#10-15 HWH WoodZAC; HiLo Type 17 milled point; by SFS Intec	Shall penetrate through the sheathing a minimum 3/8 in. Shall be corrosion resistant in accordance with FBC section 1507.4.4 and 1506.6.
	#10-12 Pancake Head wood screw	
	#10-13 Pancake Head wood screw	
Clips	1.5" SL Clip	24 ga., G-90 glavanized steel; SFS Intec 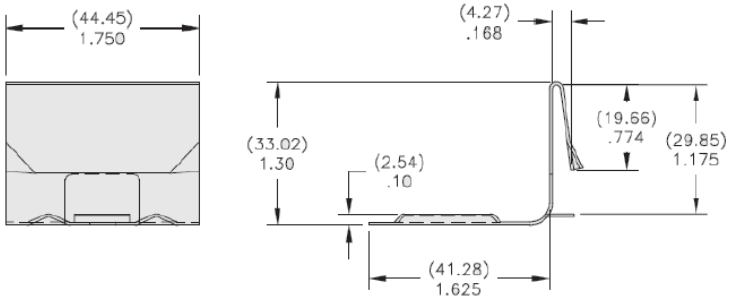
	1.75" SL Clip	18 ga., G-90 galvanized steel; SFS Intec 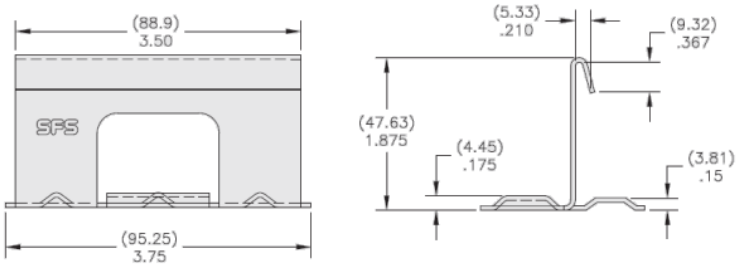
	1.5" Fixed Clip	22 ga. galvanized steel; SFS Intec 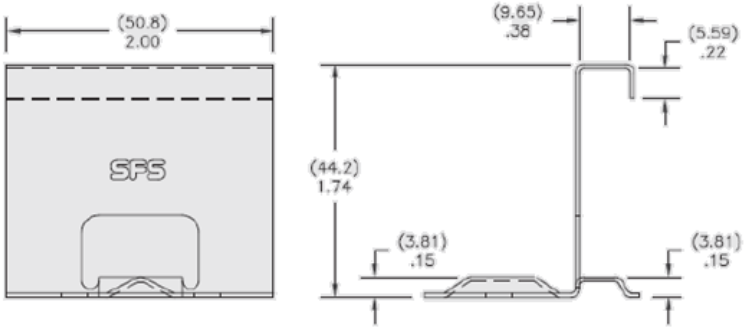

This evaluation report is provided for State of Florida product approval under Rule 61G20-3. The manufacturer shall notify CREEK Technical Services, LLC of any product changes or quality assurance changes throughout the duration for which this report is valid. This evaluation report does not express nor imply warranty, installation, recommended use, or other product attributes that are not specifically addressed herein.

APPENDIX A

Component	Product	Installation Detail
Clips – Cont'd	2" Fixed Clip	24 ga. galvanized steel; New Tech Machinery 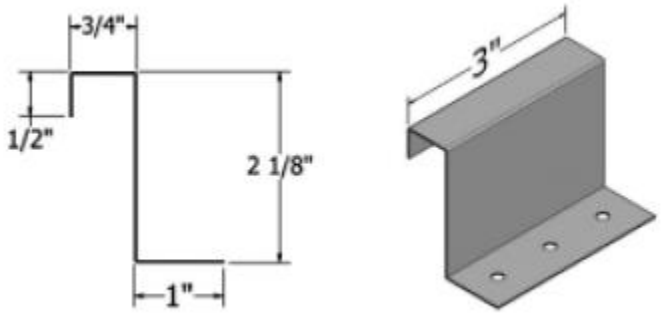
Sealant	Geocel Phantom Metal Roof Sealant	Applied in a 1/4-inch continuous bead
	Geocel 4350 Metal Roof and Siding Constuction Sealant	

Fastening Details	
Nomenclature	Attachment
PBR	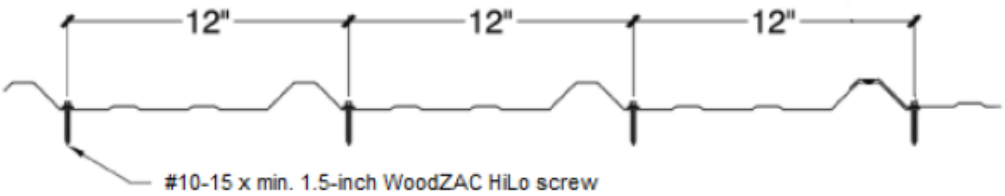
RIB	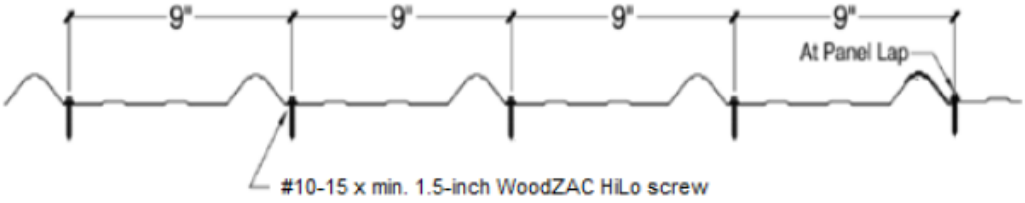
NAIL STRIP	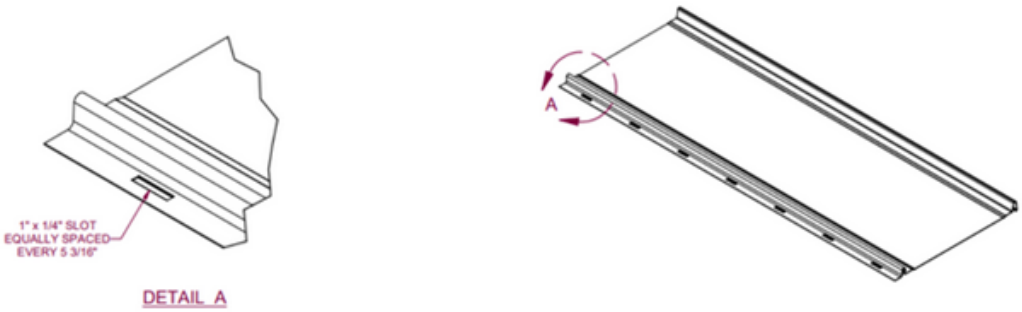

This evaluation report is provided for State of Florida product approval under Rule 61G20-3. The manufacturer shall notify CREEK Technical Services, LLC of any product changes or quality assurance changes throughout the duration for which this report is valid. This evaluation report does not express nor imply warranty, installation, recommended use, or other product attributes that are not specifically addressed herein.

APPROVED ROOF SYSTEMS

The following notes shall be observed when using the assembly tables below.

1. Maximum Design Pressure (*MDP*) was calculated using a 2:1 margin of safety per FBC Section 1504.9.
2. Refer to LIMITATIONS and sections of this evaluation when using the table(s) below.
3. Refer to INSTALLATION section of this report for installation detail when the information is not explicitly stated for the selected assembly.
4. The on-center (o.c.) spacing given is the maximum allowable attachment spacing for the rated system.
5. The panel thickness or gauge is the minimum allowable.
6. Wood Deck shall be designed by others in accordance with FBC requirements. 15/32 CDX plywood and shall be minimum 15/32-inch thick, 32/16 span rated, 4-ply, CDX plywood sheathing at maximum 24-inch span.

Roof System Numbers and Definitions	
PBR-W-#	PBR over Wood Deck (New or Existing)
RIB-W-#	RIB over Wood Deck (New or Existing)
1.5SS-W-#	1.5” Snap Lock Standing Seam Panel over Wood Deck (New or Existing)
1.75SS-W-#	1.75” Snap Lock Standing Seam Panel over Wood Deck (New or Existing)
1.5ML-W-#	1.5” Mechanical Lock Panel over Wood Deck (New or Existing)
2ML-W-#	2” Mechanical Lock Panel over Wood Deck (New or Existing)
1NS-W-#	1” Nail Strip over Wood Deck (New or Existing)

Approved Systems for PBR over Wood Deck (New or Existing)

System No.	Deck	Underlayment	Roof Panel	Panel Attachment	*MDP* (psf)
PBR-W-1	Min. 15/32 CDX plywood	As required per FBC	**Min. 26ga. steel** PBR Max. 36-inch coverage	*PBR* attachment with #10-15 x min. 1.5-inch HWH WoodZac screws spaced 24-inch o.c.	**-56**

Approved Systems for Rib over Wood Deck (New or Existing)

System No.	Deck	Underlayment	Roof Panel	Panel Attachment	*MDP* (psf)
RIB-W-1	Min. 15/32 CDX plywood	As required per FBC	**Min. 26ga. steel** Rib Max. 36-inch coverage	*RIB* attachment with #10-15 x min. 1.5-inch HWH WoodZac screws spaced 24-inch o.c.	**-67.5**

This evaluation report is provided for State of Florida product approval under Rule 61G20-3. The manufacturer shall notify CREEK Technical Services, LLC of any product changes or quality assurance changes throughout the duration for which this report is valid. This evaluation report does not express nor imply warranty, installation, recommended use, or other product attributes that are not specifically addressed herein.

APPENDIX B

Approved Systems for 1.5" Snap Lock Standing Seam over Wood Deck (New or Existing)					
System No.	Deck	Underlayment	Roof Panel	Panel Attachment	*MDP* (psf)
1.5SS-W-1	Min. 15/32 CDX plywood	As required per FBC	**Min. 24ga. steel** 1.5" Snap Lock Standing Seam Max. 16-inch coverage	1.5" SL Clip attached max. 18-inch o.c. with two (2) #10-13 x min. 1-inch pancake head screws per clip	**-63.5**

Approved Systems for 1.75" Snap Lock Standing Seam over Wood Deck (New or Existing)					
System No.	Deck	Underlayment	Roof Panel	Panel Attachment	*MDP* (psf)
1.75SS-W-1	Min. 15/32 CDX plywood	As required per FBC	**Min. 0.032" Al** 1.75" Snap Lock Standing Seam Max. 18-inch coverage	1.75" SL Clip attached max. 12-inch o.c. with two (2) #10-12 x min. 1-inch pancake head screws per clip	**-63.5**
1.75SS-W-2	Min. 15/32 CDX plywood	As required per FBC	**Min. 24ga. steel** 1.75" Snap Lock Standing Seam Max. 18-inch coverage	1.75" SL Clip attached max. 16-inch o.c. with two (2) #10-13 x min. 1-inch pancake head screws per clip	**-101**

Approved Systems for 1.5" Mechanical Lock over Wood Deck (New or Existing)					
System No.	Deck	Underlayment	Roof Panel	Panel Attachment	*MDP* (psf)
1.5ML-W-1	Min. 15/32 CDX plywood	As required per FBC	**Min. 24ga. steel** 1.5" Mechanical Lock Max. 16-inch coverage	1.5" Fixed Clip attached 24-inch o.c. with two (2) #10-13 x min. 1-inch pancake head screws per clip; Panel mechanically seamed 90° with lock	**-30**

This evaluation report is provided for State of Florida product approval under Rule 61G20-3. The manufacturer shall notify CREEK Technical Services, LLC of any product changes or quality assurance changes throughout the duration for which this report is valid. This evaluation report does not express nor imply warranty, installation, recommended use, or other product attributes that are not specifically addressed herein.

APPENDIX B

Approved Systems for 2" Mechanical Lock over Wood Deck (New or Existing)					
System No.	Deck	Underlayment	Roof Panel	Panel Attachment	*MDP* (psf)
2ML-W-1	Min. 15/32 CDX plywood	As required per FBC	**Min. 24ga. steel** 2" Mechanical Lock Max. 16-inch coverage	2" Fixed Clip attached 24-inch o.c. with three (3) #10-13 x min. 1-inch pancake head screws per clip; Panel mechanically seamed 90° with lock	**-63.5**

Approved Systems for 1" Nail Strip over Wood Deck (New or Existing)					
System No.	Deck	Underlayment	Roof Panel	Panel Attachment	*MDP* (psf)
1NS-W-1	Min. 15/32 CDX plywood	As required per FBC	**Min. 0.032" Al** 1" Nail Strip Max. 16-inch coverage	*NAIL STRIP* attachment with one (1) #10-13 x min. 1-inch pancake head screws per slot spaced 5 3/16-inch o.c.; Geocel Phantom Metal Roof Sealant applied to the apex of the female lock prior to engaging the seam.	**-93.5**
1NS-W-2	Min. 15/32 CDX plywood	As required per FBC	**Min. 26ga. steel** 1" Nail Strip Max. 16-inch coverage	*NAIL STRIP* attachment with one (1) #10-13 x min. 1-inch pancake head screws per slot spaced 5 3/16-inch o.c.; Geocel 4350 Metal Roof and Siding Construction Sealant applied to the apex of the female lock prior to engaging the seam.	**-93.5**
1NS-W-3	Min. 15/32 CDX plywood	As required per FBC	**Min. 24ga. steel** 1" Nail Strip Max. 16-inch coverage	*NAIL STRIP* attachment with one (1) #10-13 x min. 1-inch pancake head screws per slot spaced 5 3/16-inch o.c.; Geocel 4350 Metal Roof and Siding Construction Sealant applied to the apex of the female lock prior to engaging the seam.	**-93.5**
1NS-W-4	Min. 15/32 CDX plywood	As required per FBC	**Min. 0.032" Al** 1" Nail Strip Max. 16-inch coverage	*NAIL STRIP* attachment with two (2) #10-13 x min. 1-inch pancake head screws per slot spaced 5 3/16-inch o.c.; Geocel Phantom Metal Roof Sealant applied to the apex of the female lock prior to engaging the seam.	**-93.5**
1NS-W-5	Min. 15/32 CDX plywood	As required per FBC	**Min. 26ga. steel** 1" Nail Strip Max. 16-inch coverage	*NAIL STRIP* attachment with two (2) #10-13 x min. 1-inch pancake head screws per slot spaced 5 3/16-inch o.c.; Geocel 4350 Metal Roof and Siding Construction Sealant applied to the apex of the female lock prior to engaging the seam.	**-138.5**
1NS-W-6	Min. 15/32 CDX plywood	As required per FBC	**Min. 24ga. steel** 1" Nail Strip Max. 16-inch coverage	*NAIL STRIP* attachment with two (2) #10-13 x min. 1-inch pancake head screws per slot spaced 5 3/16-inch o.c.; Geocel 4350 Metal Roof and Siding Construction Sealant applied to the apex of the female lock prior to engaging the seam.	**-146**

This evaluation report is provided for State of Florida product approval under Rule 61G20-3. The manufacturer shall notify CREEK Technical Services, LLC of any product changes or quality assurance changes throughout the duration for which this report is valid. This evaluation report does not express nor imply warranty, installation, recommended use, or other product attributes that are not specifically addressed herein.

DESIGN WIND LOADS

The following tables provide design wind loads for components and cladding in accordance with Section 1609 of the FBC and ASCE 7-22 under the following provisions:

1. Wind speeds for risk category I, II, III, and IV buildings shall be as defined in Section 1609 of the FBC.
2. Exposure B, C and D shall be as defined in section 1609 of the FBC.
3. Design wind load provided only for gable/hip roofs with roof slopes between 2:12 and 12:12
4. All calculations are based on an effective wind area of 10-ft^2 or less.
5. Topographic factors such as escarpments or hills have been excluded from the analysis
6. Overhangs have been excluded from the analysis.
7. Wind directionality factor, K_d = 0.85
8. Ground elevation factor, K_e = 1.0
9. V_{ult} is shown in the tables below. Design wind loads are calculated using $V_{asd} = V_{ult}\sqrt{0.6}$ per 1609.3.1.
10. Zone 2 applies to Zone 3 for Hip Roofs where the slope is between 2:12 and 6.1:12
11. Projects with mean roof heights greater than 60-ft shall be evaluated by a licensed design professional
12. Zones 1, 2, and 3 shall be defined as shown below. Dimension "a" shall be 10% of the least horizontal dimension or (0.4 x *Mean Roof Height)*, whichever is smaller, but not less than either 4% of the least horizontal dimension or 3ft

Gable Roofs		Hip Roofs
Slopes 2:12 to 6.1:12	Slopes >6.1:12 to 12:12	Slopes 2:12 to 12:12
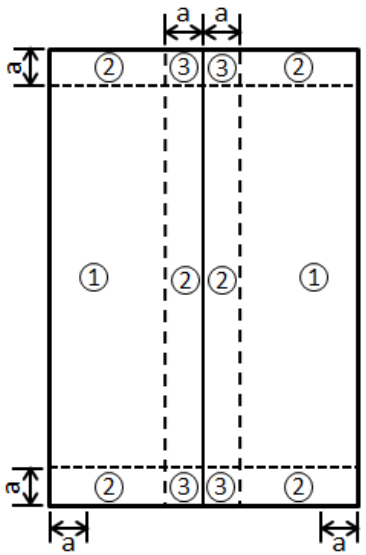	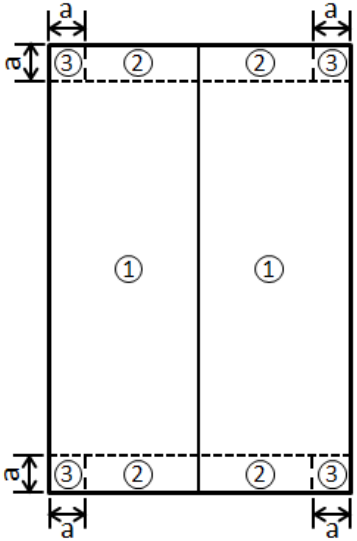	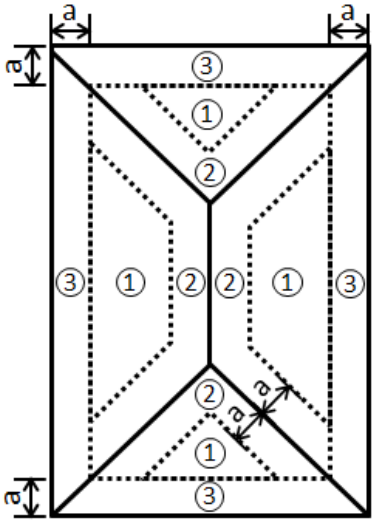

This evaluation report is provided for State of Florida product approval under Rule 61G20-3. The manufacturer shall notify CREEK Technical Services, LLC of any product changes or quality assurance changes throughout the duration for which this report is valid. This evaluation report does not express nor imply warranty, installation, recommended use, or other product attributes that are not specifically addressed herein.

APPENDIX C

Gable/Hip Roofs in **Exposure B** (Roof slope between 2:12 and 12:12)											
Building Type	Zone	Mean Roof Height (ft)	Basic Wind Speed (mph)								
			120	130	140	150	160	170	180	190	200
Enclosed/ Partially Open	1	20	-25.4	-29.8	-34.6	-39.7	-45.2	-51.0	-57.2	-63.7	-70.6
		25	-26.9	-31.6	-36.6	-42.0	-47.8	-54.0	-60.5	-67.5	-74.7
		30	-28.3	-33.2	-38.5	-44.1	-50.2	-56.7	-63.6	-70.8	-78.5
		40	-30.5	-35.8	-41.5	-47.7	-54.2	-61.2	-68.6	-76.5	-84.7
		50	-32.4	-38.0	-44.1	-50.6	-57.6	-65.0	-72.8	-81.2	-89.9
		60	-34.0	-39.9	-46.3	-53.1	-60.4	-68.2	-76.5	-85.2	-94.4
	2	20	-33.6	-39.4	-45.7	-52.5	-59.7	-67.4	-75.5	-84.2	-93.3
		25	-35.5	-41.7	-48.4	-55.5	-63.2	-71.3	-80.0	-89.1	-98.7
		30	-37.3	-43.8	-50.8	-58.3	-66.3	-74.9	-84.0	-93.6	-103.7
		40	-40.3	-47.3	-54.9	-63.0	-71.6	-80.9	-90.7	-101.0	-111.9
		50	-42.8	-50.2	-58.2	-66.8	-76.0	-85.8	-96.2	-107.2	-118.8
		60	-44.9	-52.7	-61.1	-70.2	-79.8	-90.1	-101.0	-112.6	-124.7
	3	20	-44.1	-51.7	-60.0	-68.8	-78.3	-88.4	-99.1	-110.5	-122.4
		25	-46.7	-54.8	-63.5	-72.9	-82.9	-93.6	-105.0	-117.0	-129.6
		30	-49.0	-57.5	-66.7	-76.5	-87.1	-98.3	-110.2	-122.8	-136.1
		40	-52.9	-62.1	-72.0	-82.6	-94.0	-106.1	-119.0	-132.6	-146.9
		50	-56.1	-65.9	-76.4	-87.7	-99.8	-112.6	-126.3	-140.7	-155.9
		60	-58.9	-69.2	-80.2	-92.1	-104.8	-118.3	-132.6	-147.7	-163.7
Partially Enclosed	1	20	-29.7	-34.9	-40.5	-46.5	-52.8	-59.7	-66.9	-74.5	-82.6
		25	-31.5	-36.9	-42.8	-49.2	-56.0	-63.2	-70.8	-78.9	-87.4
		30	-33.0	-38.8	-45.0	-51.6	-58.7	-66.3	-74.4	-82.8	-91.8
		40	-35.7	-41.9	-48.6	-55.8	-63.4	-71.6	-80.3	-89.4	-99.1
		50	-37.9	-44.4	-51.5	-59.2	-67.3	-76.0	-85.2	-94.9	-105.2
		60	-39.8	-46.7	-54.1	-62.1	-70.7	-79.8	-89.4	-99.7	-110.4
	2	20	-37.9	-44.5	-51.6	-59.2	-67.4	-76.0	-85.2	-95.0	-105.2
		25	-40.1	-47.1	-54.6	-62.7	-71.3	-80.5	-90.3	-100.6	-111.4
		30	-42.1	-49.4	-57.3	-65.8	-74.9	-84.5	-94.8	-105.6	-117.0
		40	-45.5	-53.4	-61.9	-71.1	-80.8	-91.3	-102.3	-114.0	-126.3
		50	-48.3	-56.6	-65.7	-75.4	-85.8	-96.9	-108.6	-121.0	-134.1
		60	-50.7	-59.5	-69.0	-79.2	-90.1	-101.7	-114.0	-127.0	-140.7
	3	20	-48.4	-56.8	-65.8	-75.6	-86.0	-97.1	-108.8	-121.3	-134.4
		25	-51.2	-60.1	-69.7	-80.0	-91.1	-102.8	-115.3	-128.4	-142.3
		30	-53.8	-63.1	-73.2	-84.0	-95.6	-107.9	-121.0	-134.8	-149.4
		40	-58.1	-68.1	-79.0	-90.7	-103.2	-116.5	-130.6	-145.6	-161.3
		50	-61.6	-72.3	-83.9	-96.3	-109.6	-123.7	-138.7	-154.5	-171.2
		60	-64.7	-75.9	-88.1	-101.1	-115.0	-129.8	-145.6	-162.2	-179.7

This evaluation report is provided for State of Florida product approval under Rule 61G20-3. The manufacturer shall notify CREEK Technical Services, LLC of any product changes or quality assurance changes throughout the duration for which this report is valid. This evaluation report does not express nor imply warranty, installation, recommended use, or other product attributes that are not specifically addressed herein.

APPENDIX C

Gable/Hip Roofs in **Exposure C** (Roof slope between 2:12 and 12:12)											
Building Type	Zone	Mean Roof Height (ft)	Basic Wind Speed (mph)								
			120	130	140	150	160	170	180	190	200
Enclosed/ Partially Open	1	20	-36.9	-43.3	-50.2	-57.6	-65.6	-74.0	-83.0	-92.5	-102.5
		25	-38.7	-45.4	-52.7	-60.5	-68.8	-77.7	-87.1	-97.1	-107.6
		30	-40.2	-47.2	-54.7	-62.8	-71.4	-80.7	-90.4	-100.8	-111.6
		40	-42.6	-50.0	-58.0	-66.6	-75.8	-85.5	-95.9	-106.8	-118.4
		50	-44.6	-52.3	-60.7	-69.7	-79.3	-89.5	-100.4	-111.8	-123.9
		60	-46.3	-54.3	-63.0	-72.3	-82.3	-92.9	-104.2	-116.1	-128.6
	2	20	-48.7	-57.2	-66.3	-76.1	-86.6	-97.8	-109.6	-122.2	-135.4
		25	-51.2	-60.0	-69.6	-79.9	-90.9	-102.7	-115.1	-128.2	-142.1
		30	-53.1	-62.3	-72.3	-83.0	-94.4	-106.6	-119.5	-133.1	-147.5
		40	-56.3	-66.1	-76.6	-88.0	-100.1	-113.0	-126.7	-141.1	-156.4
		50	-58.9	-69.2	-80.2	-92.1	-104.8	-118.3	-132.6	-147.7	-163.7
		60	-61.2	-71.8	-83.2	-95.6	-108.7	-122.7	-137.6	-153.3	-169.9
	3	20	-64.0	-75.1	-87.1	-99.9	-113.7	-128.4	-143.9	-160.3	-177.7
		25	-67.1	-78.8	-91.4	-104.9	-119.4	-134.7	-151.1	-168.3	-186.5
		30	-69.7	-81.8	-94.8	-108.9	-123.9	-139.8	-156.8	-174.7	-193.6
		40	-73.9	-86.7	-100.6	-115.5	-131.4	-148.3	-166.3	-185.2	-205.3
		50	-77.3	-90.8	-105.3	-120.8	-137.5	-155.2	-174.0	-193.9	-214.8
		60	-80.3	-94.2	-109.3	-125.4	-142.7	-161.1	-180.6	-201.2	-223.0
Partially Enclosed	1	20	-43.2	-50.6	-58.7	-67.4	-76.7	-86.6	-97.1	-108.2	-119.9
		25	-45.3	-53.2	-61.6	-70.8	-80.5	-90.9	-101.9	-113.5	-125.8
		30	-47.0	-55.2	-64.0	-73.5	-83.6	-94.3	-105.8	-117.8	-130.6
		40	-49.9	-58.5	-67.9	-77.9	-88.6	-100.0	-112.2	-125.0	-138.5
		50	-52.2	-61.2	-71.0	-81.5	-92.8	-104.7	-117.4	-130.8	-144.9
		60	-54.2	-63.6	-73.7	-84.6	-96.3	-108.7	-121.8	-135.8	-150.4
	2	20	-55.0	-64.5	-74.9	-85.9	-97.8	-110.4	-123.7	-137.9	-152.8
		25	-57.7	-67.7	-78.6	-90.2	-102.6	-115.8	-129.9	-144.7	-160.3
		30	-59.9	-70.3	-81.6	-93.6	-106.5	-120.2	-134.8	-150.2	-166.4
		40	-63.5	-74.6	-86.5	-99.3	-112.9	-127.5	-143.0	-159.3	-176.5
		50	-66.5	-78.0	-90.5	-103.9	-118.2	-133.5	-149.6	-166.7	-184.7
		60	-69.0	-81.0	-93.9	-107.8	-122.7	-138.5	-155.3	-173.0	-191.7
	3	20	-70.2	-82.4	-95.6	-109.7	-124.8	-140.9	-158.0	-176.0	-195.1
		25	-73.7	-86.5	-100.3	-115.2	-131.0	-147.9	-165.8	-184.8	-204.7
		30	-76.5	-89.8	-104.1	-119.5	-136.0	-153.5	-172.1	-191.8	-212.5
		40	-81.1	-95.2	-110.4	-126.8	-144.2	-162.8	-182.5	-203.4	-225.4
		50	-84.9	-99.7	-115.6	-132.7	-150.9	-170.4	-191.0	-212.9	-235.9
		60	-88.1	-103.4	-120.0	-137.7	-156.7	-176.9	-198.3	-220.9	-244.8

This evaluation report is provided for State of Florida product approval under Rule 61G20-3. The manufacturer shall notify CREEK Technical Services, LLC of any product changes or quality assurance changes throughout the duration for which this report is valid. This evaluation report does not express nor imply warranty, installation, recommended use, or other product attributes that are not specifically addressed herein.

APPENDIX C

Gable/Hip Roofs in **Exposure D** (Roof slope between 2:12 and 12:12)											
Building Type	Zone	Mean Roof Height (ft)	Basic Wind Speed (mph)								
			120	130	140	150	160	170	180	190	200
Enclosed/ Partially Open	1	20	-44.7	-52.4	-60.8	-69.8	-79.4	-89.7	-100.5	-112.0	-124.1
		25	-46.4	-54.4	-63.1	-72.4	-82.4	-93.1	-104.3	-116.2	-128.8
		30	-47.9	-56.2	-65.1	-74.8	-85.1	-96.1	-107.7	-120.0	-132.9
		40	-50.3	-59.1	-68.5	-78.6	-89.4	-101.0	-113.2	-126.1	-139.8
		50	-52.3	-61.4	-71.2	-81.7	-93.0	-105.0	-117.7	-131.1	-145.3
		60	-54.0	-63.4	-73.5	-84.4	-96.0	-108.4	-121.5	-135.3	-150.0
	2	20	-59.0	-69.3	-80.3	-92.2	-104.9	-118.5	-132.8	-148.0	-163.9
		25	-61.3	-71.9	-83.4	-95.7	-108.9	-122.9	-137.8	-153.6	-170.1
		30	-63.2	-74.2	-86.1	-98.8	-112.4	-126.9	-142.3	-158.5	-175.6
		40	-66.5	-78.0	-90.5	-103.9	-118.2	-133.4	-149.6	-166.6	-184.6
		50	-69.1	-81.1	-94.1	-108.0	-122.8	-138.7	-155.5	-173.2	-191.9
		60	-71.3	-83.7	-97.1	-111.4	-126.8	-143.1	-160.5	-178.8	-198.1
	3	20	-77.5	-90.9	-105.4	-121.0	-137.7	-155.5	-174.3	-194.2	-215.2
		25	-80.4	-94.4	-109.4	-125.6	-142.9	-161.3	-180.9	-201.5	-223.3
		30	-83.0	-97.4	-112.9	-129.7	-147.5	-166.5	-186.7	-208.0	-230.5
		40	-87.2	-102.4	-118.7	-136.3	-155.1	-175.1	-196.3	-218.7	-242.3
		50	-90.7	-106.4	-123.4	-141.7	-161.2	-182.0	-204.1	-227.4	-251.9
		60	-93.6	-109.9	-127.4	-146.3	-166.4	-187.9	-210.6	-234.7	-260.0
Partially Enclosed	1	20	-52.3	-61.3	-71.1	-81.7	-92.9	-104.9	-117.6	-131.0	-145.2
		25	-54.2	-63.7	-73.8	-84.7	-96.4	-108.8	-122.0	-136.0	-150.6
		30	-56.0	-65.7	-76.2	-87.5	-99.5	-112.3	-126.0	-140.3	-155.5
		40	-58.9	-69.1	-80.1	-92.0	-104.6	-118.1	-132.4	-147.5	-163.5
		50	-61.2	-71.8	-83.3	-95.6	-108.8	-122.8	-137.7	-153.4	-169.9
		60	-63.2	-74.1	-86.0	-98.7	-112.3	-126.7	-142.1	-158.3	-175.4
	2	20	-66.6	-78.2	-90.7	-104.1	-118.4	-133.7	-149.9	-167.0	-185.0
		25	-69.1	-81.1	-94.1	-108.0	-122.9	-138.7	-155.5	-173.3	-192.0
		30	-71.4	-83.7	-97.1	-111.5	-126.8	-143.2	-160.5	-178.9	-198.2
		40	-75.0	-88.0	-102.1	-117.2	-133.3	-150.5	-168.8	-188.0	-208.4
		50	-78.0	-91.5	-106.1	-121.8	-138.6	-156.5	-175.4	-195.5	-216.6
		60	-80.5	-94.5	-109.6	-125.8	-143.1	-161.5	-181.1	-201.8	-223.6
	3	20	-85.0	-99.8	-115.8	-132.9	-151.2	-170.7	-191.4	-213.2	-236.2
		25	-88.3	-103.6	-120.1	-137.9	-156.9	-177.1	-198.6	-221.3	-245.2
		30	-91.1	-106.9	-124.0	-142.4	-162.0	-182.8	-205.0	-228.4	-253.1
		40	-95.8	-112.4	-130.4	-149.7	-170.3	-192.2	-215.5	-240.1	-266.1
		50	-99.6	-116.9	-135.5	-155.6	-177.0	-199.8	-224.0	-249.6	-276.6
		60	-102.8	-120.6	-139.9	-160.6	-182.7	-206.3	-231.2	-257.7	-285.5

END OF REPORT

This evaluation report is provided for State of Florida product approval under Rule 61G20-3. The manufacturer shall notify CREEK Technical Services, LLC of any product changes or quality assurance changes throughout the duration for which this report is valid. This evaluation report does not express nor imply warranty, installation, recommended use, or other product attributes that are not specifically addressed herein.